Bio-Inspired Cold-Formed Steel Built-Up Section Members Using an Interlocking Design: Concept and Behaviour

Ke-Jiang Zhan, Supervised by Prof. Ben Young and Prof. Tak-Ming Chan

Department of Civil and Environmental Engineering, The Hong Kong Polytechnic University

Introduction

Current technology for assembling cold-formed steel built-up section members

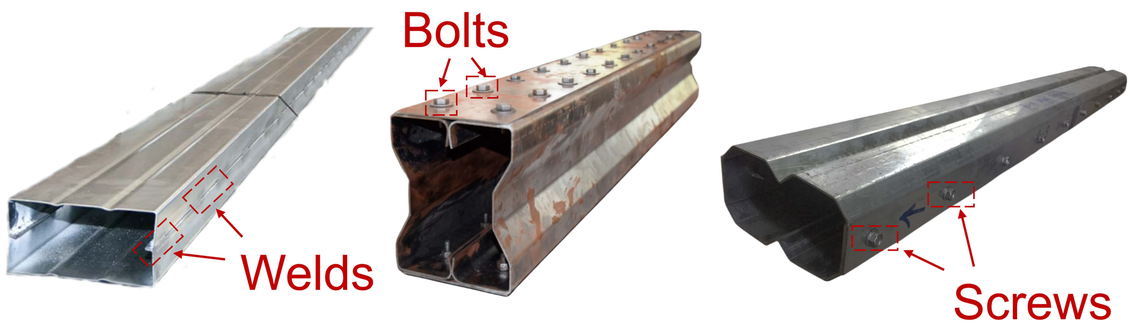

Interlocking structures in nature → Engineering structures?

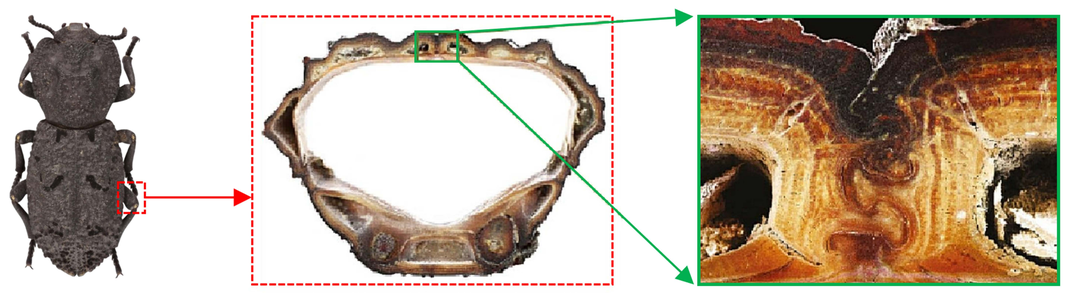

Concept and advantages

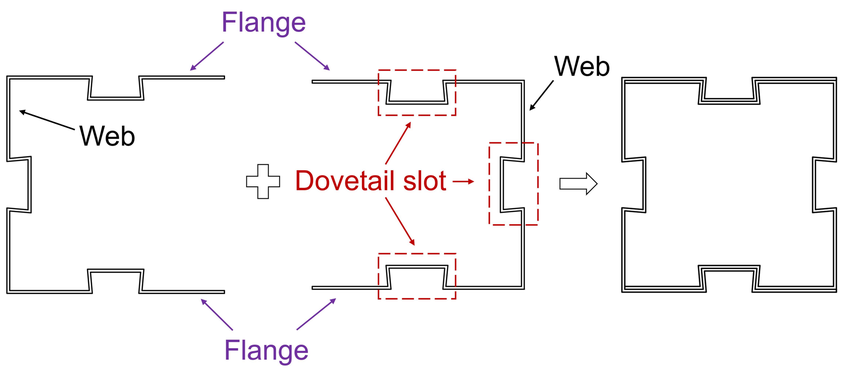

Cross-sectional profile

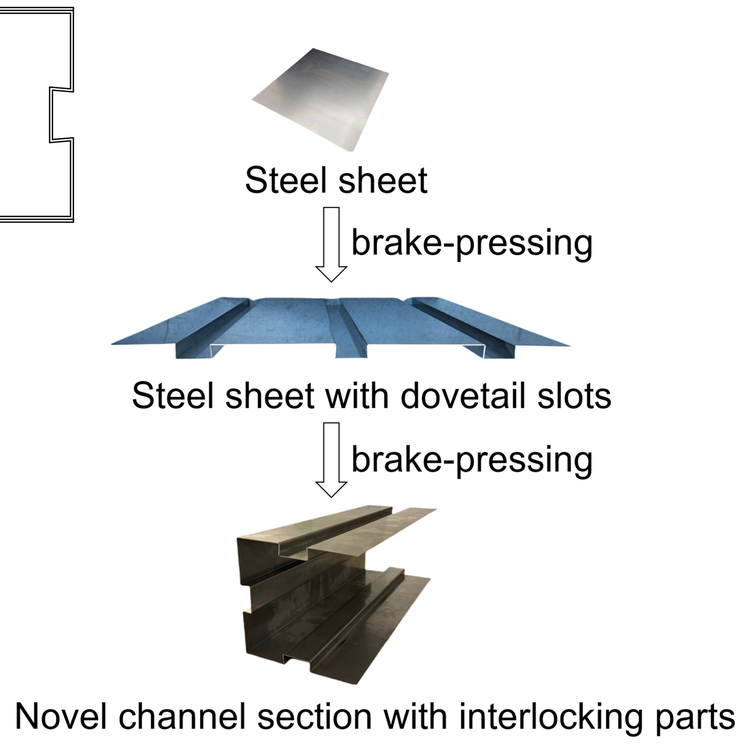

Fabrication route

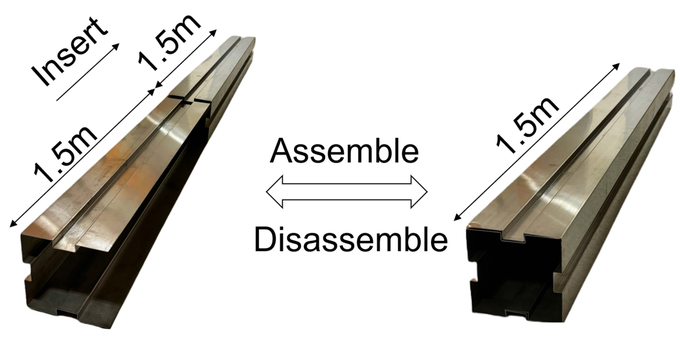

Assemble and disassemble process

- Combined effect → 1+1 > 2
- Enhanced structural performance
- Eliminate the use of traditional connectors
- Feasible for disassembly & reuse
- Simplify the assembly process
- Streamline construction operations
- Extend the life cycle of materials

Test results and conclusions

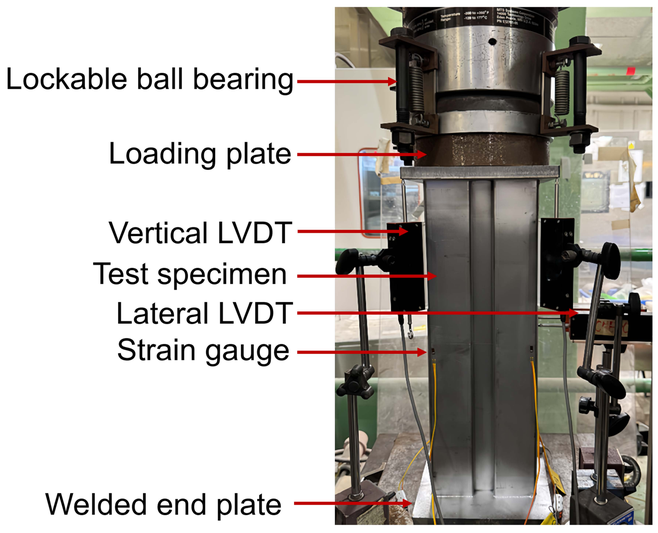

Stub column test setup

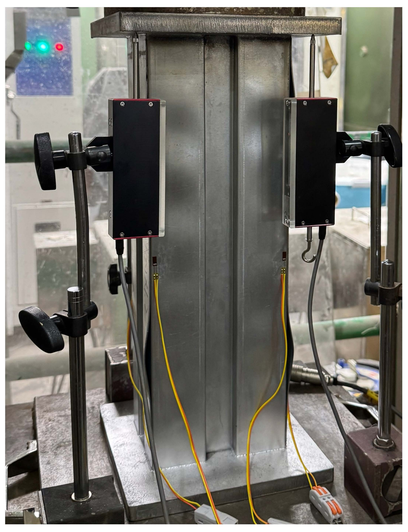

Typical failure modes

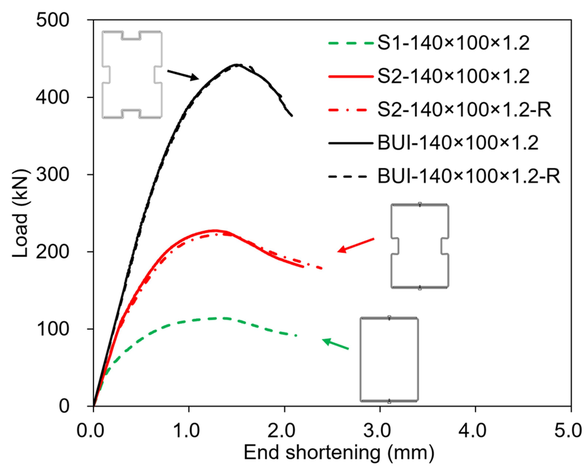

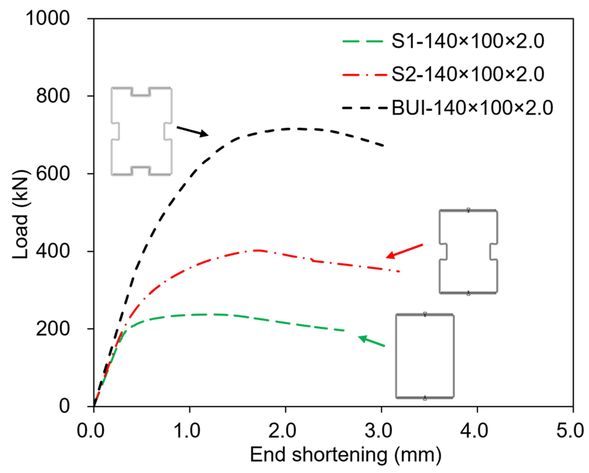

Load-end shortening curves

- The novel design can successfully achieve the **interlocking effect**, ensuring that the two individual channel sections **remain connected** throughout the entire testing process.
- The novel cold-formed steel built-up section stub columns **outperform** the traditional ones using screws by exhibiting a **significant increase in ultimate capacity** within the same configurations.